FURNITURE DETAILS

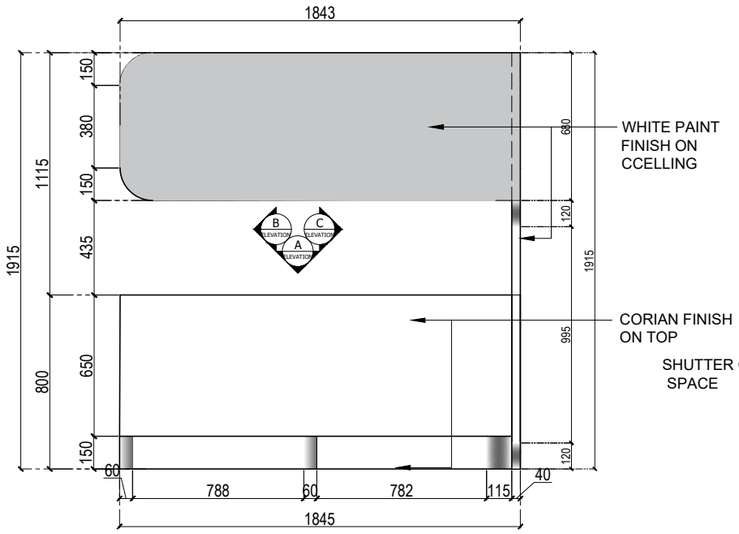

1 PLAN
RECEPTION TABLE

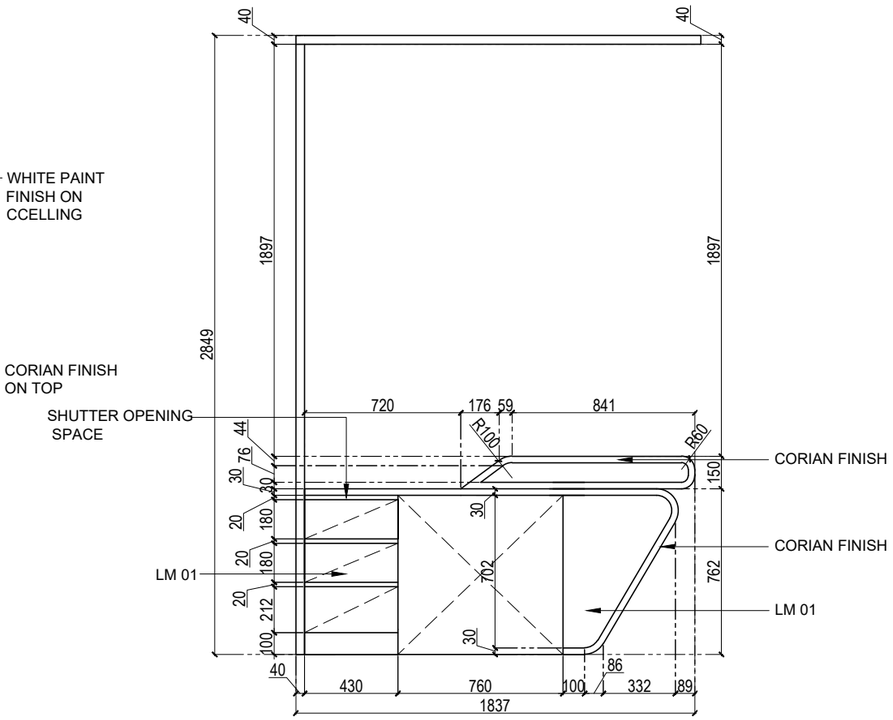

2 ELEVATION AT B
RECEPTION TABLE

5 REFERENCE IMAAGE
RECEPTION

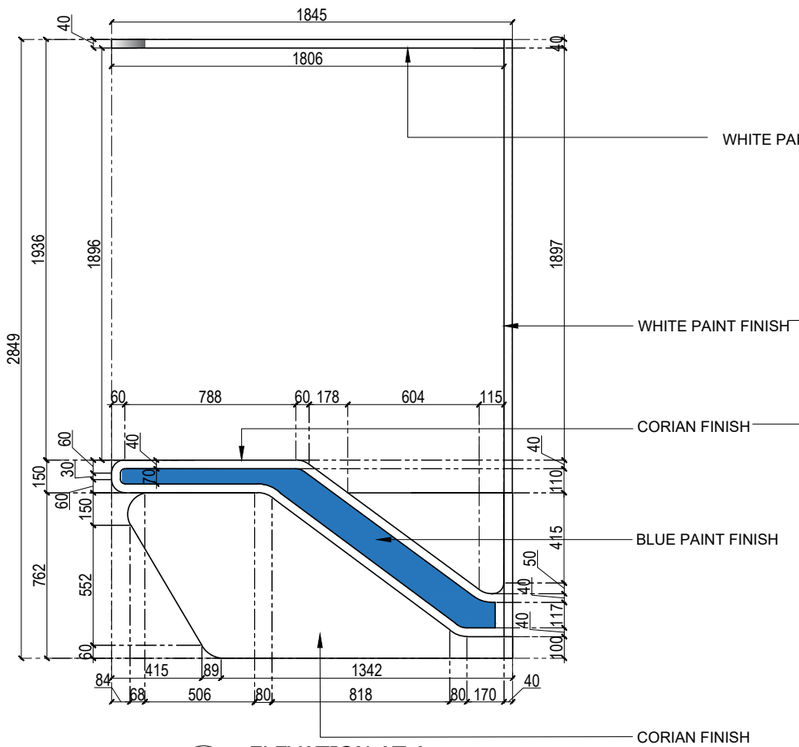

3 ELEVATION AT A
RECEPTION TABLE

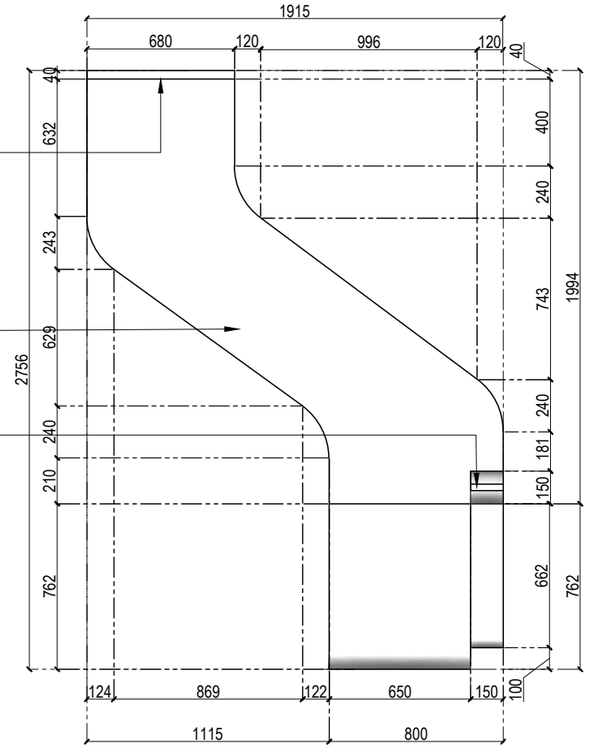

4 ELEVATION AT C
RECEPTION TABLE

RECEPTION TABLE

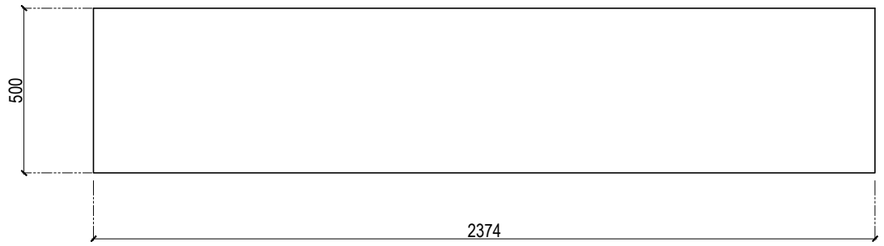

1 PLAN
WORKSTATION AREA STORAGE

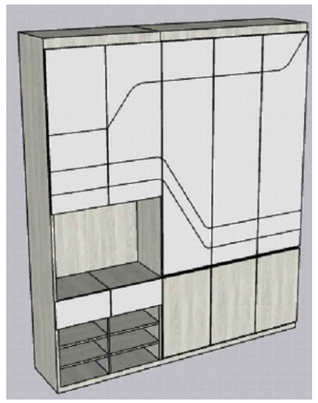

3 REFERENCE IMAGE
WORKSTATION AREA STORAGE

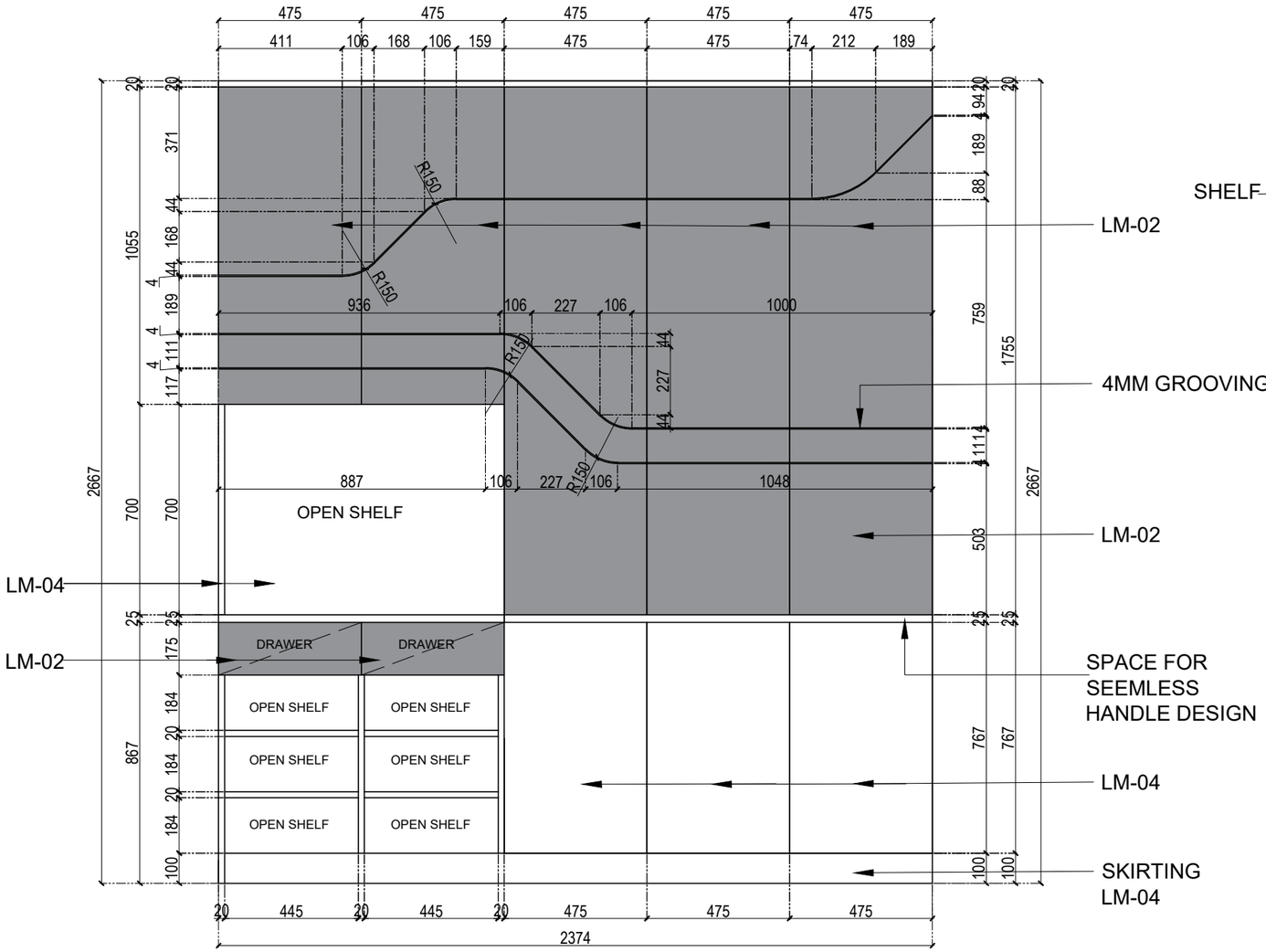

2 FRONT ELEVATION
WORKSTATION AREA

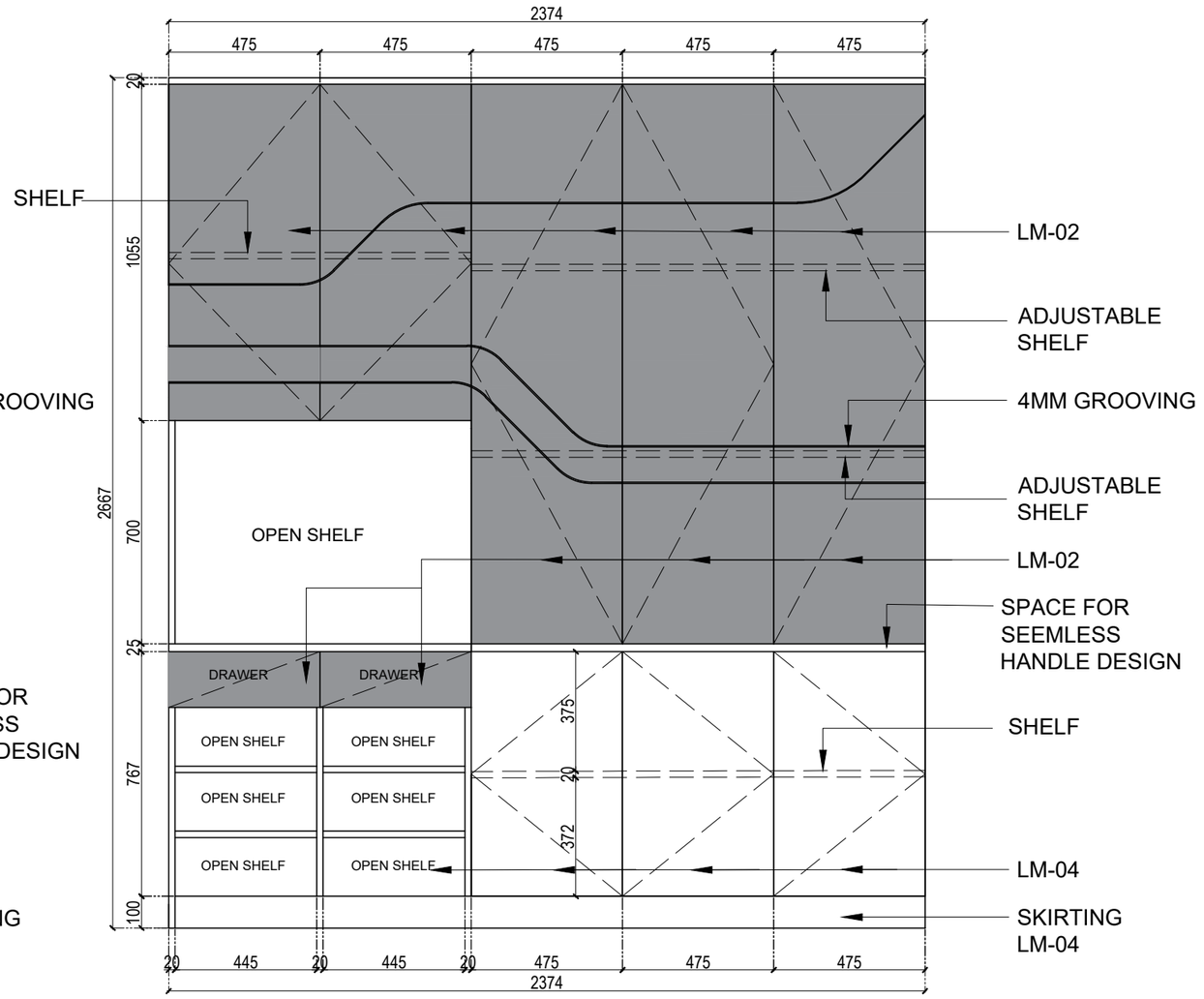

2.1 FRONT ELEVATION
WORKSTATION AREA

WORKSTATION AREA STORAGE

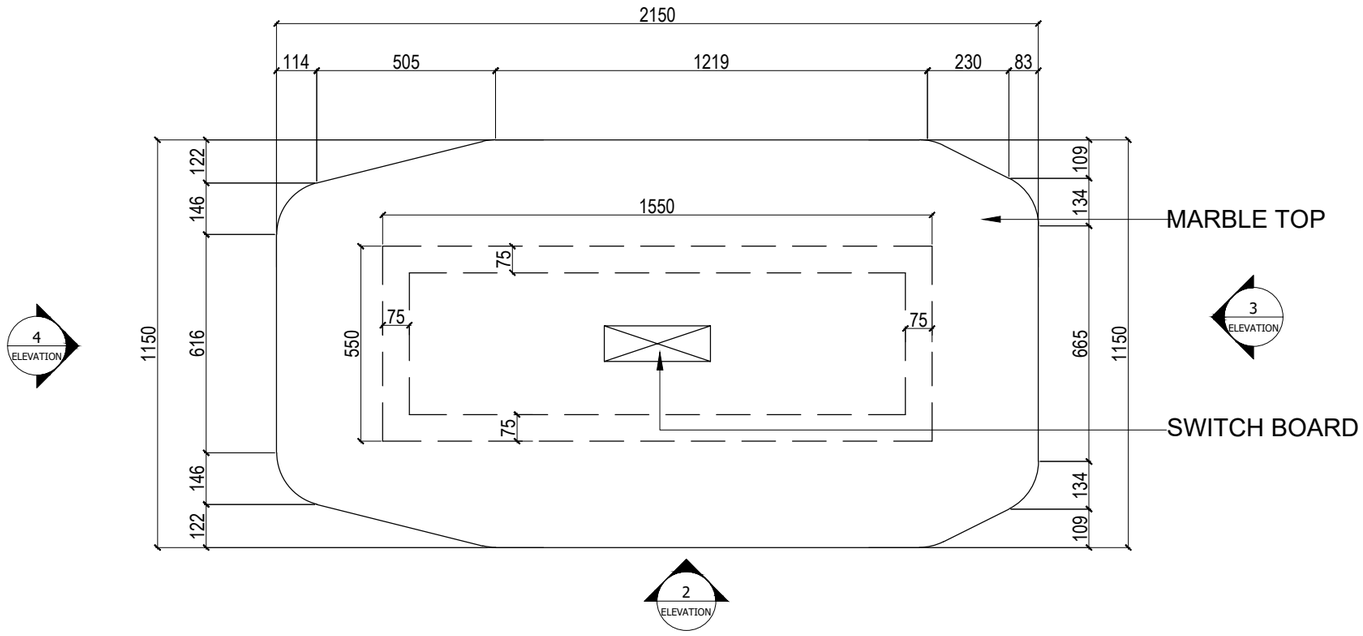

1 PLAN
MEETING TABLE

5 REFERENCE IMAGE
MEETING TABLE

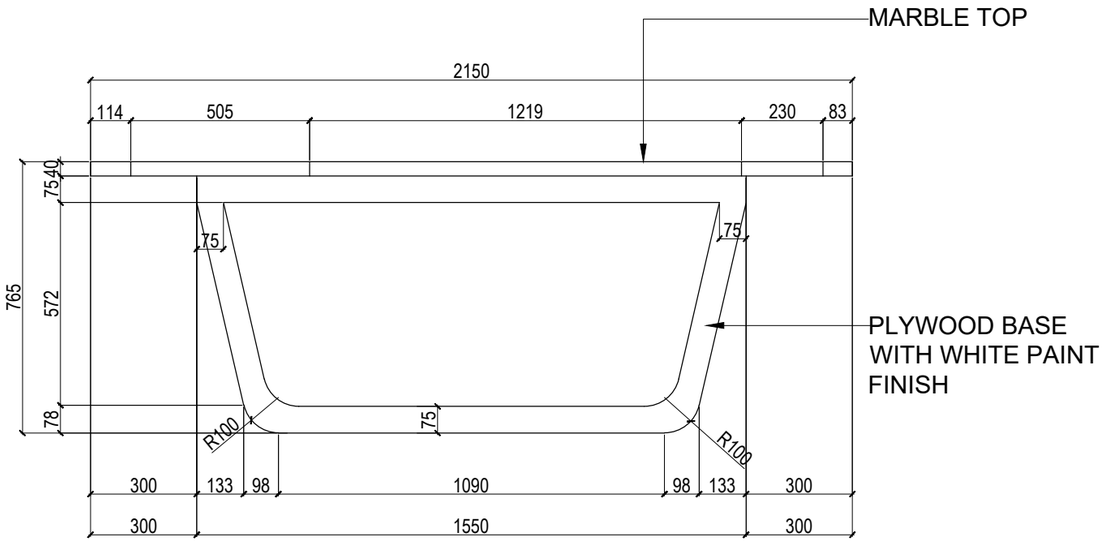

2 ELEVATION
MEETING TABLE

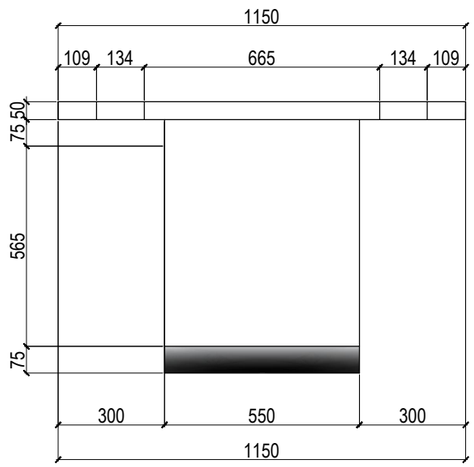

3 ELEVATION
MEETING TABLE

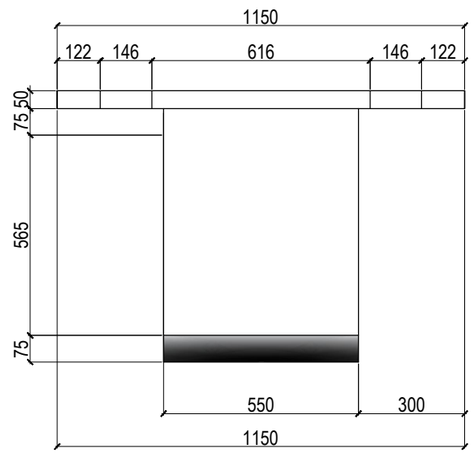

4 ELEVATION
MEETING TABLE

MEETING TABLE

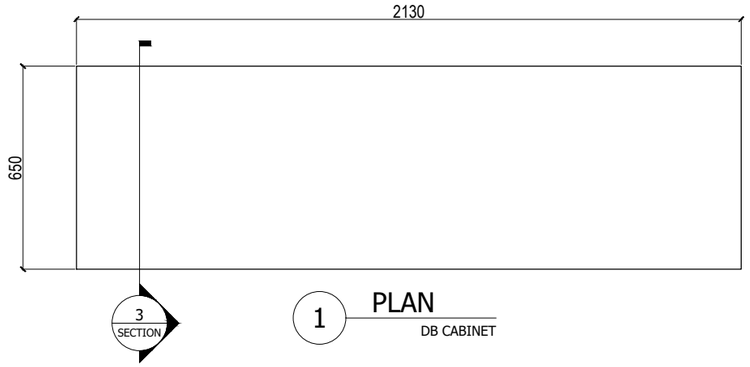

1 PLAN
DB CABINET

4 REFERENCE IMAGE
DB CABINET

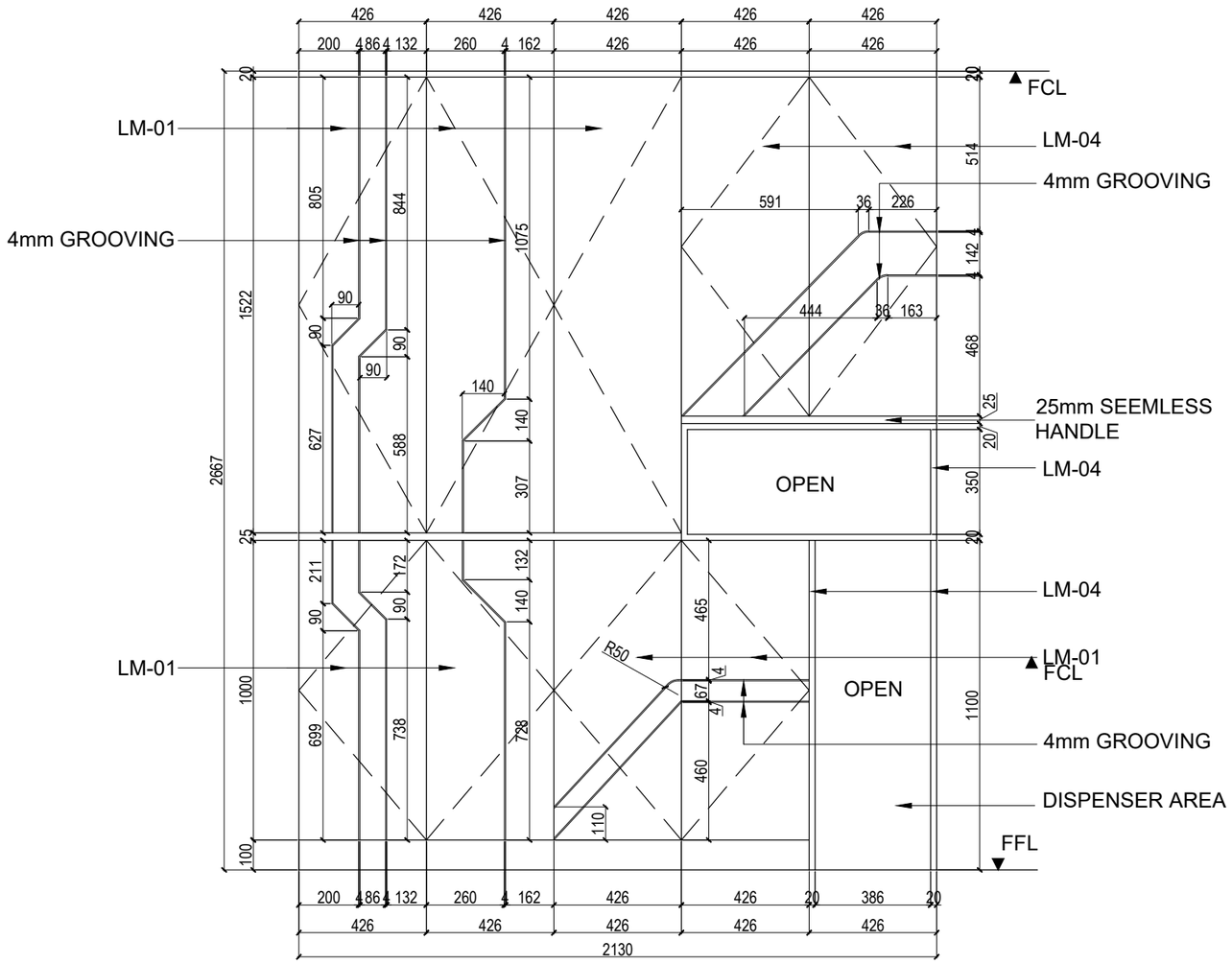

2 FRONT ELEVATION
DB CABINET

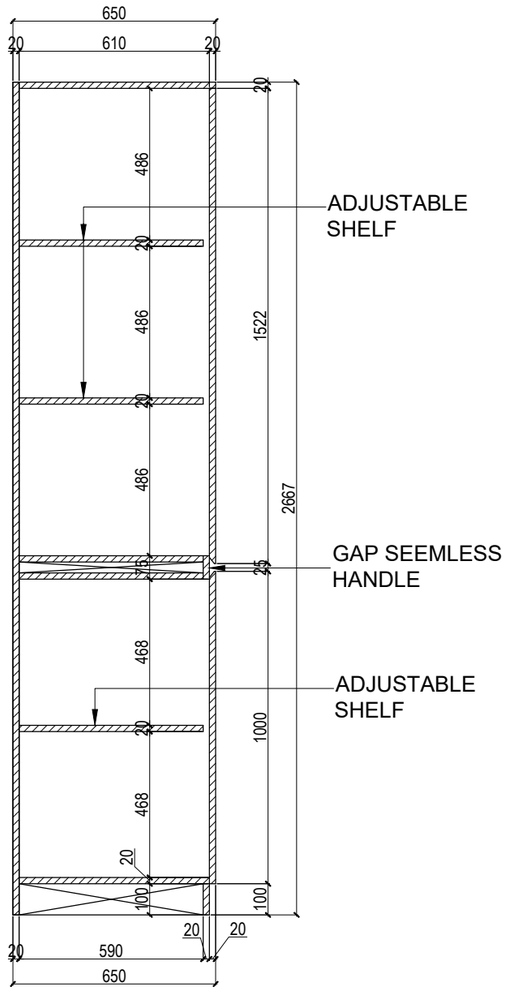

3 SECTION
DB CABINET

DB CABINET

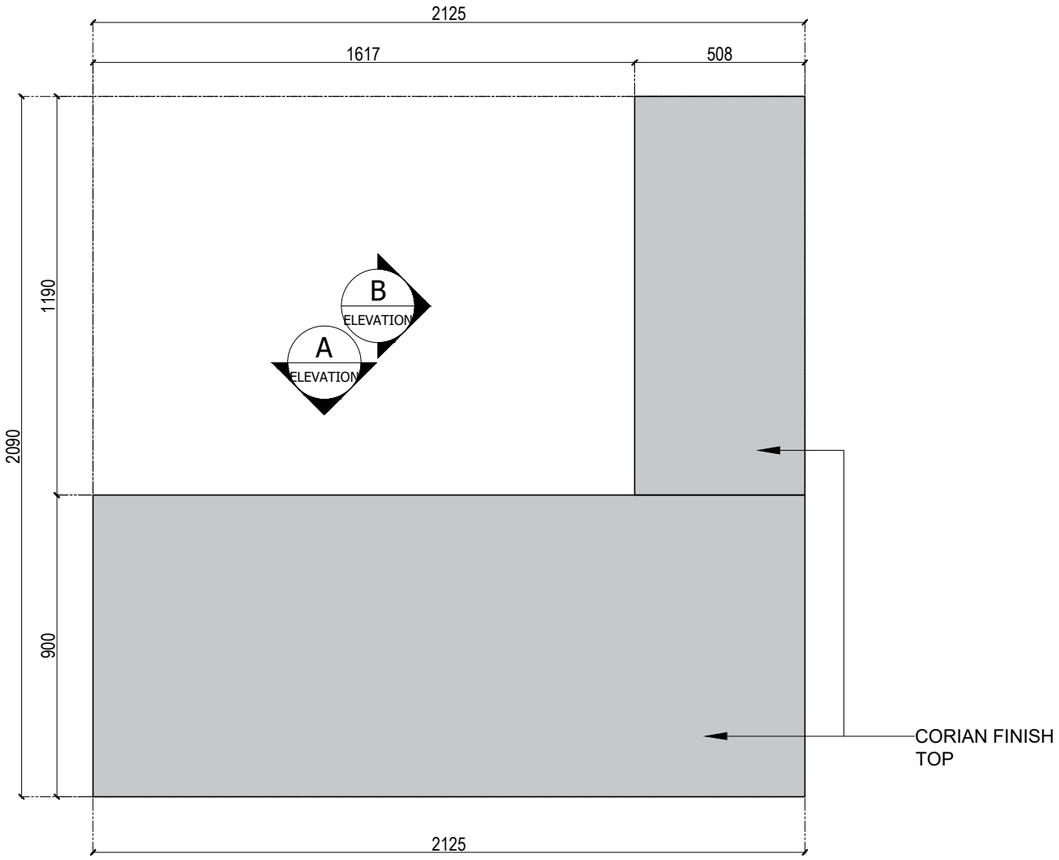

1 PLAN
MD WORKING TABLE

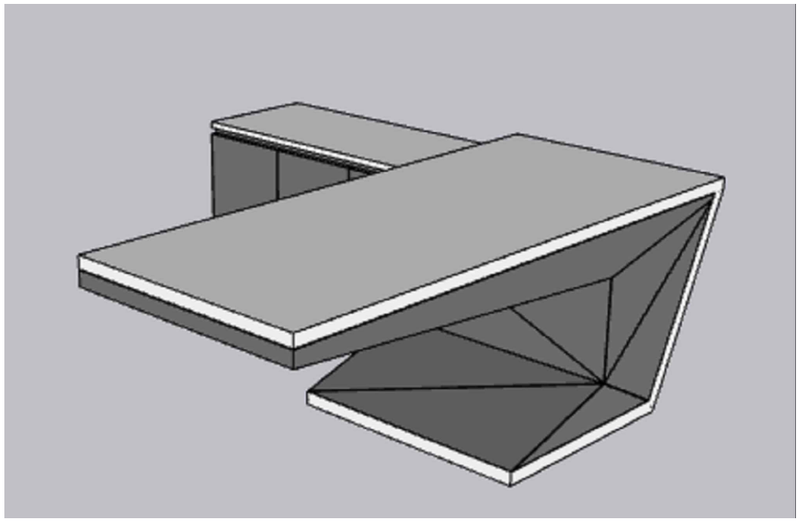

4 REFERENCE IMAGE
MD WORKING TABLE

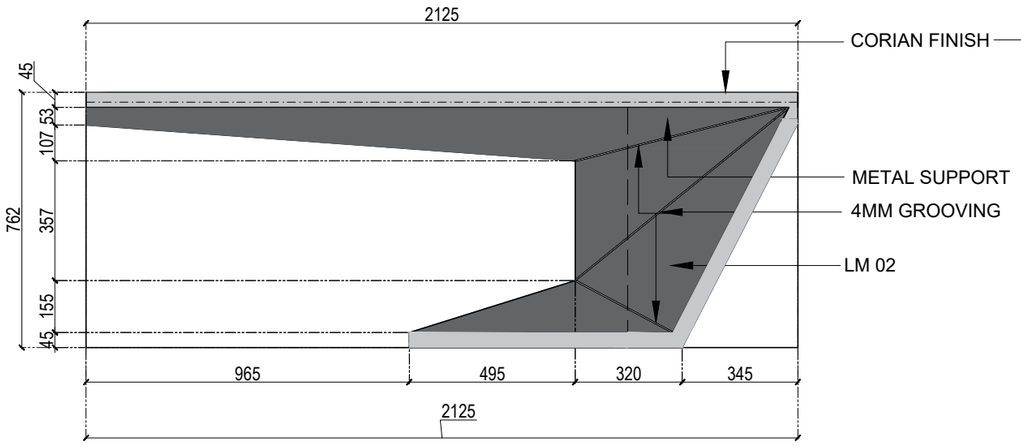

2 ELEVATION AT A
MD WORKING TABLE

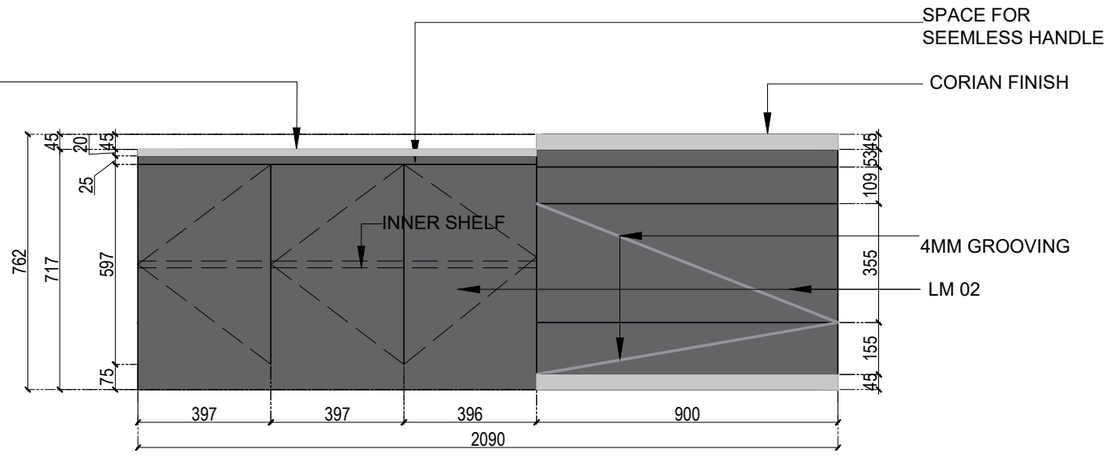

3 ELEVATION AT B
MD WORKING TABLE

MD WORKING TABLE

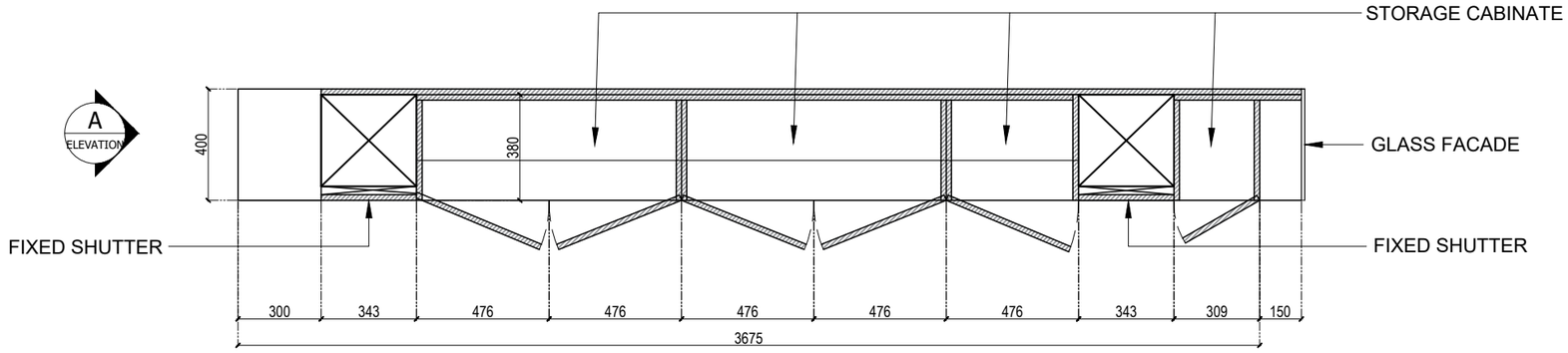

1 PLAN

MD STORAGE CABINATE

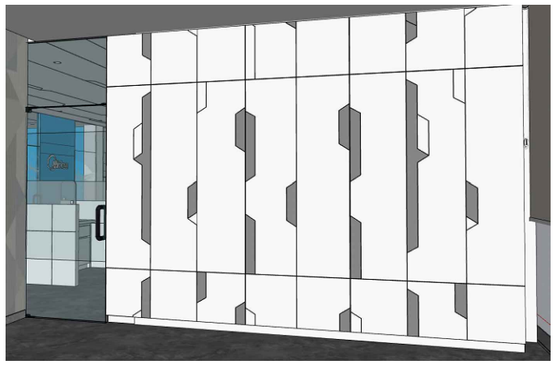

5 REFERENCE IMAGE

MD STORAGE CABINATE

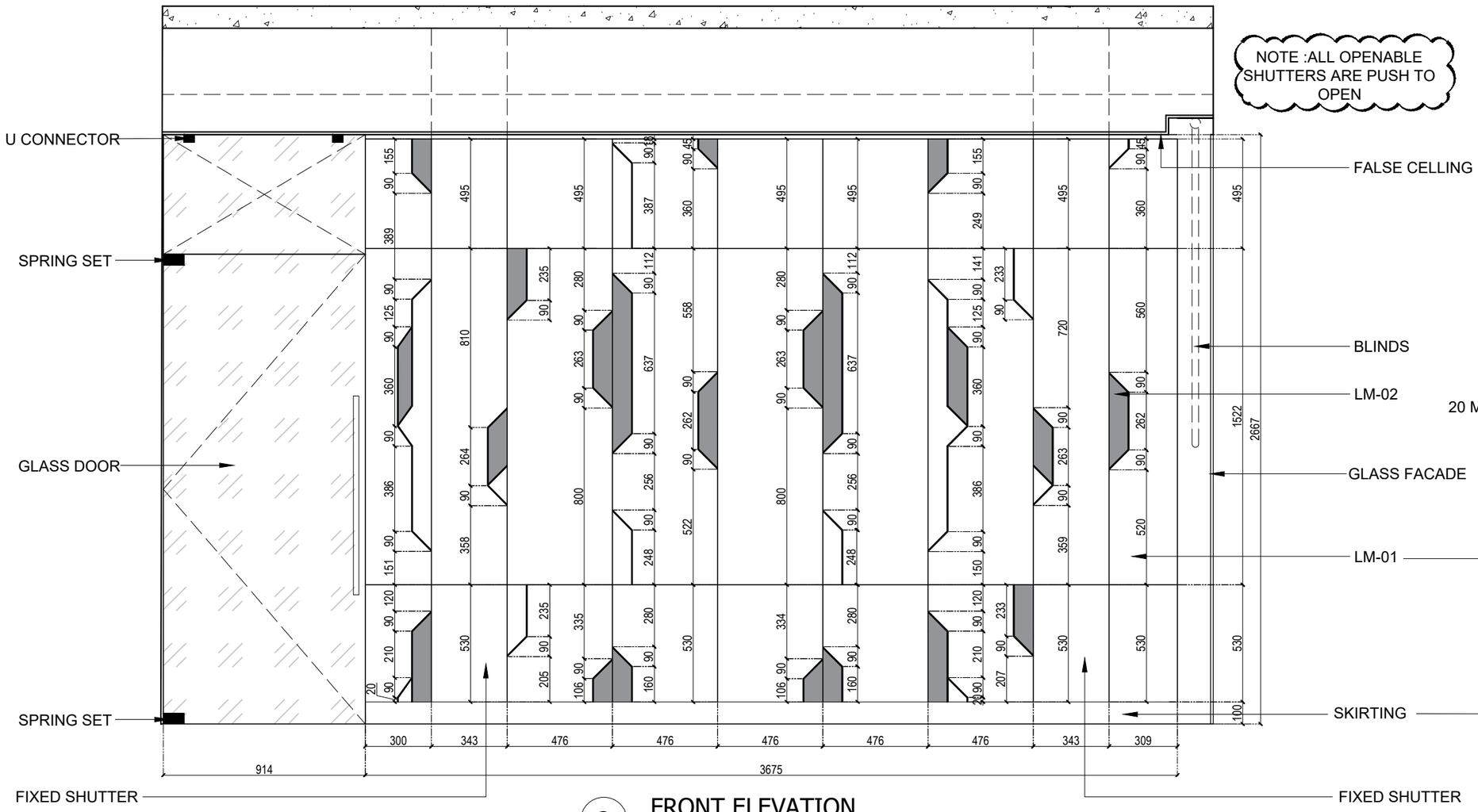

2 FRONT ELEVATION

MD STORAGE CABINATE

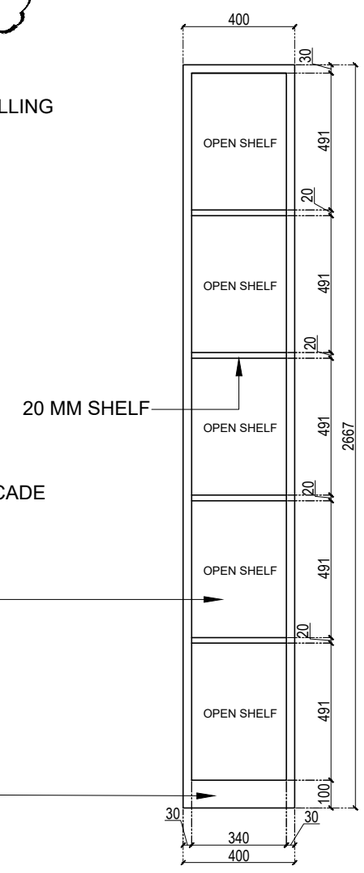

3 ELEVATION AT A

MD STORAGE CABINATE

MD ROOM STORAGE CABINATE

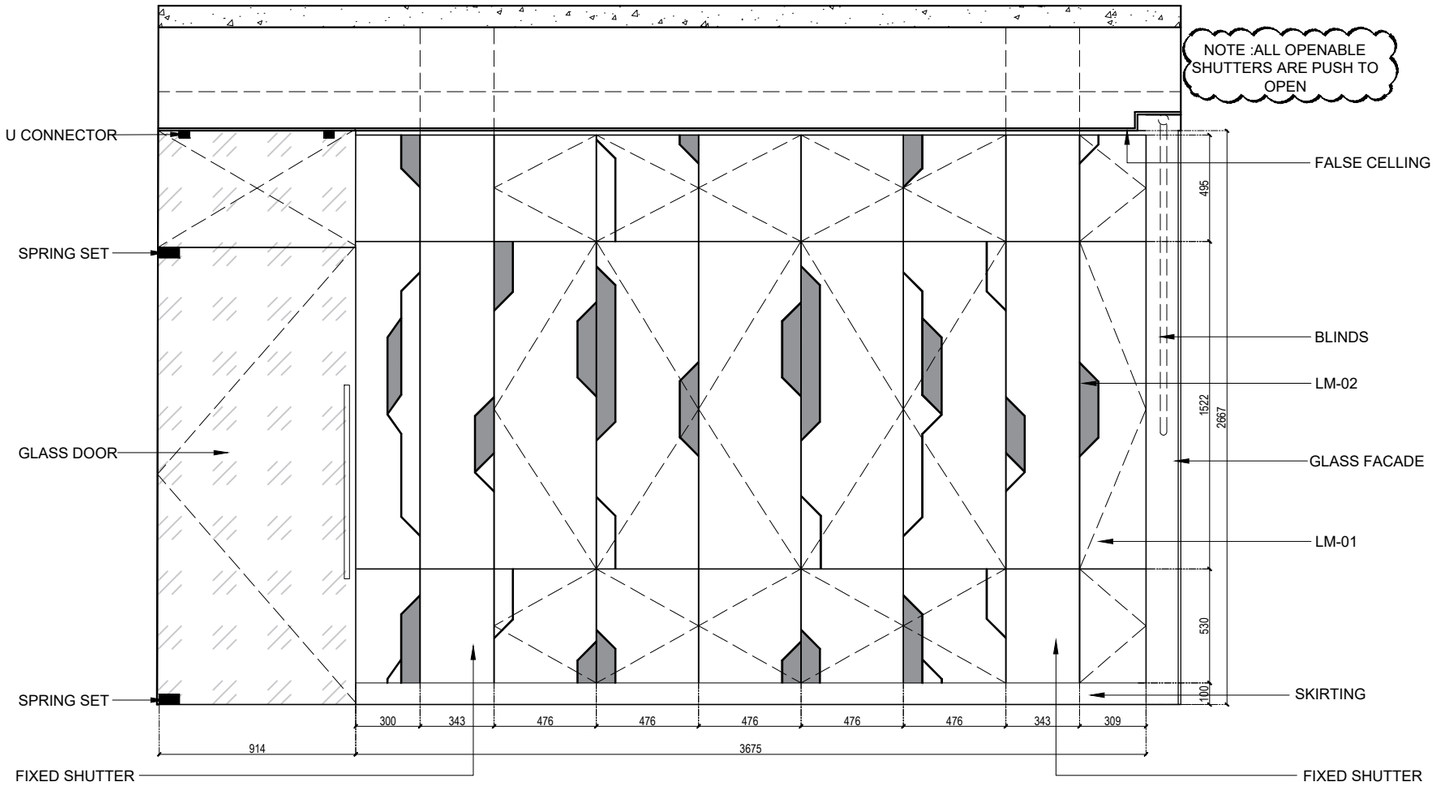

2.1 FRONT ELEVATION

MD STORAGE CABINATE

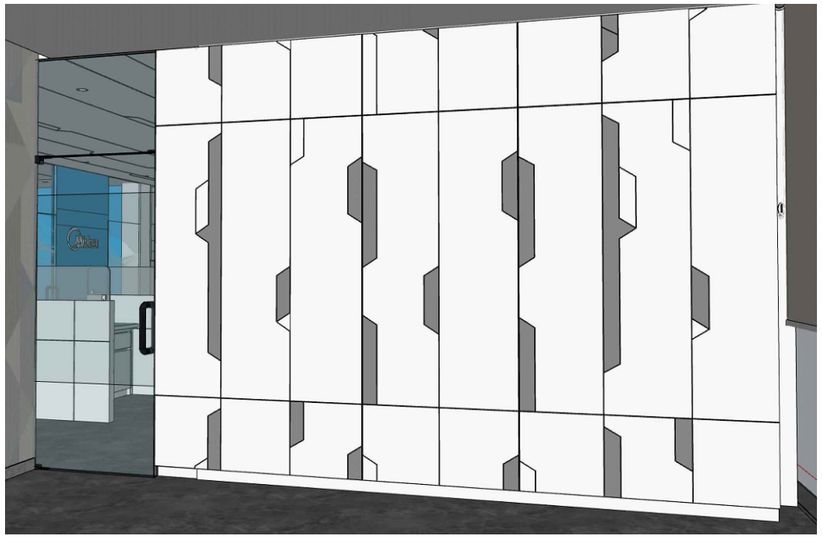

5 REFERENCE IMAGE

MD STORAGE CABINATE

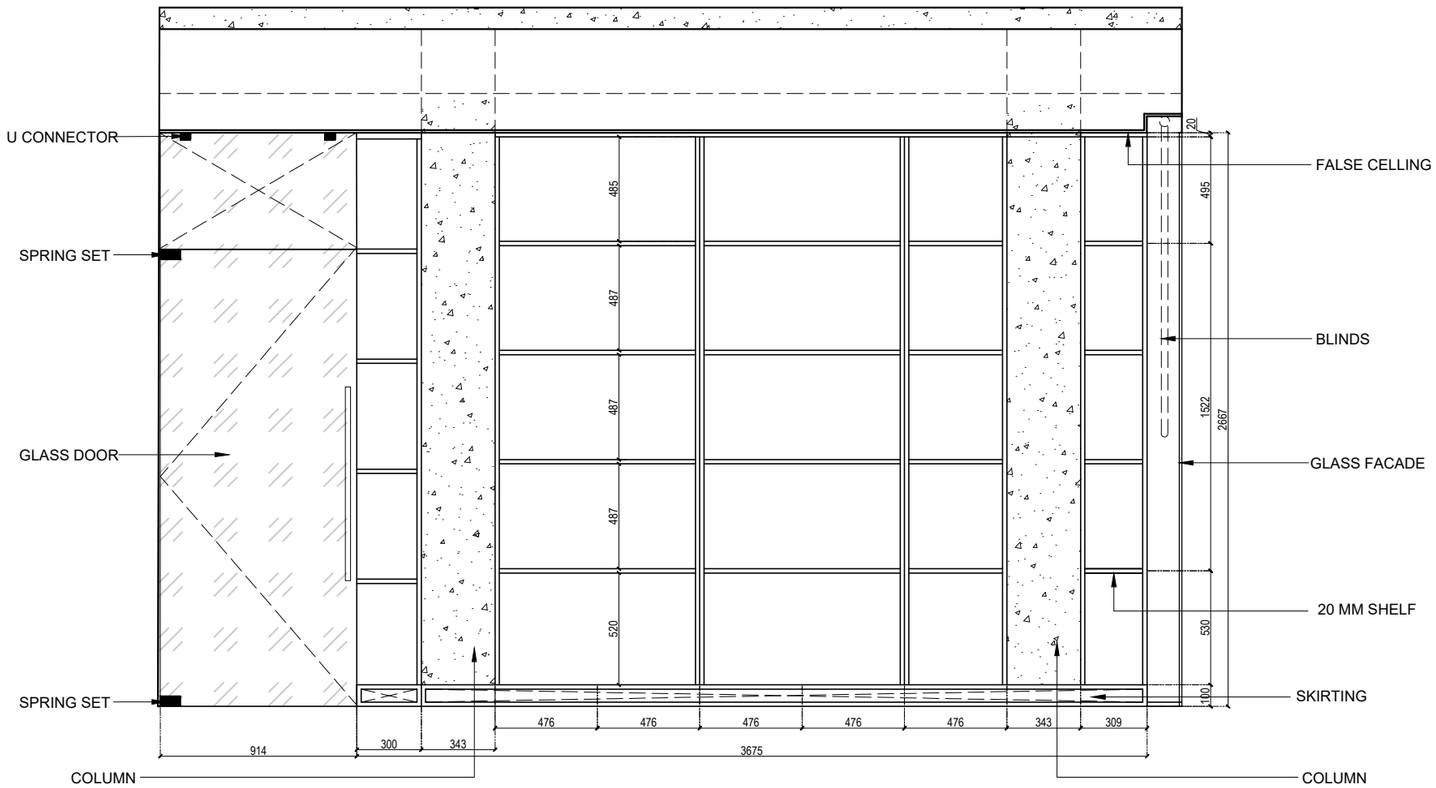

4 INNER ELEVATION

MD STORAGE CABINATE

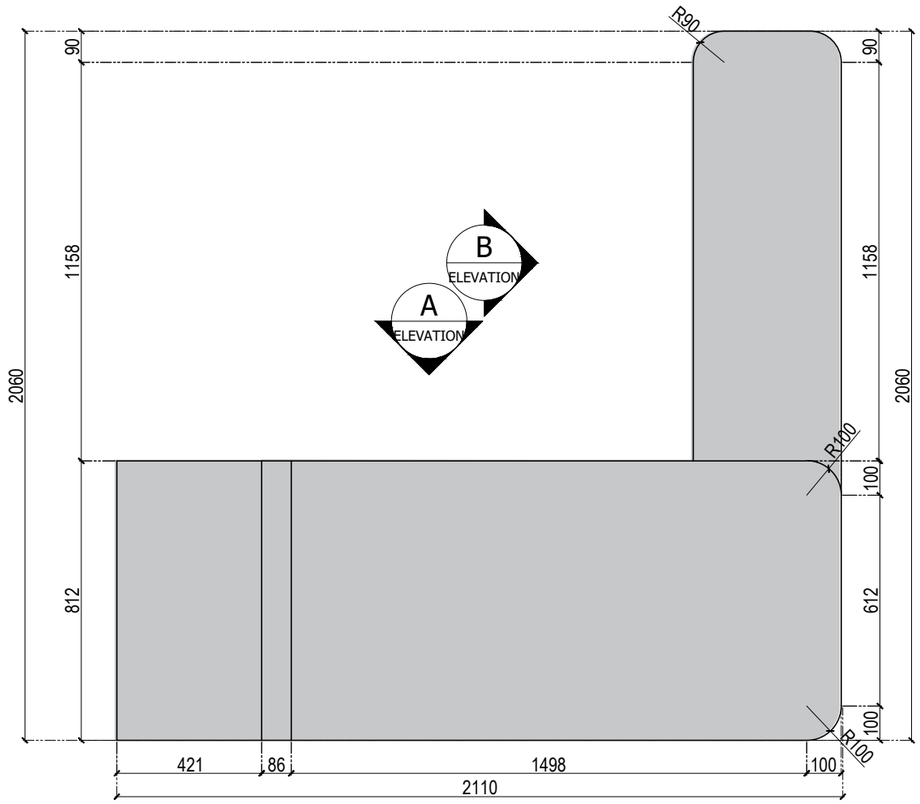

1 PLAN
DIRECTOR ROOM

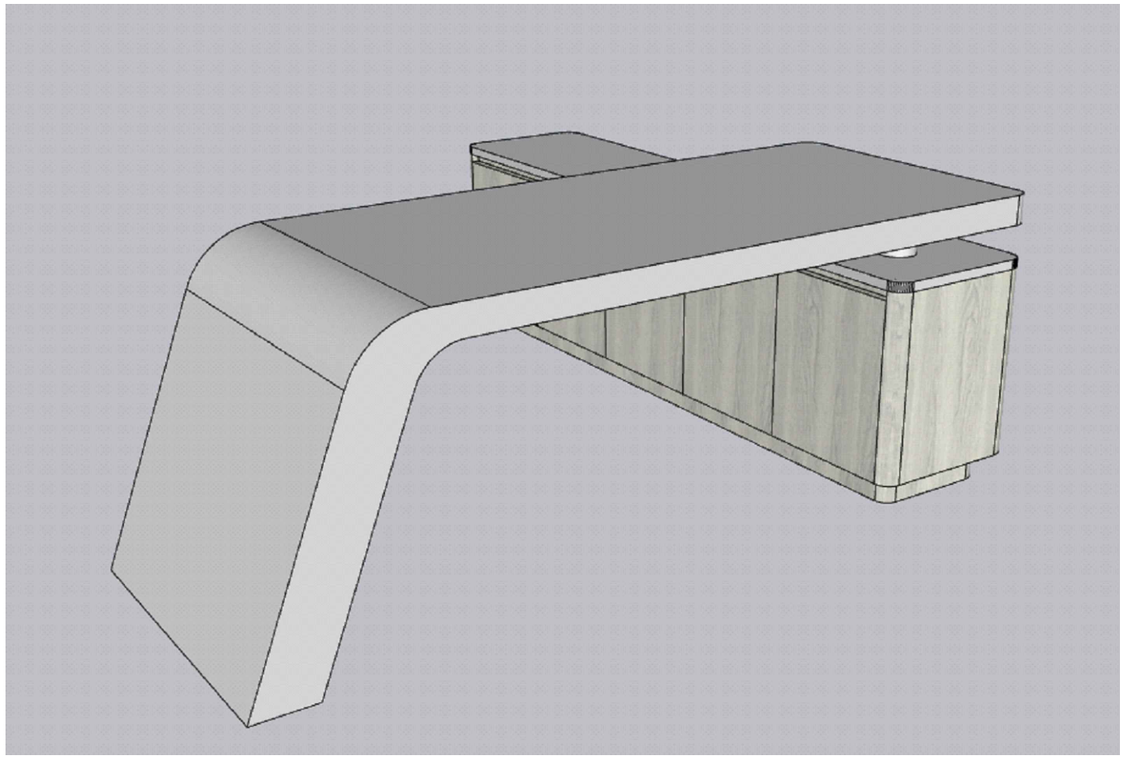

4 REFERENCE IMAGE
DIRECTOR ROOM

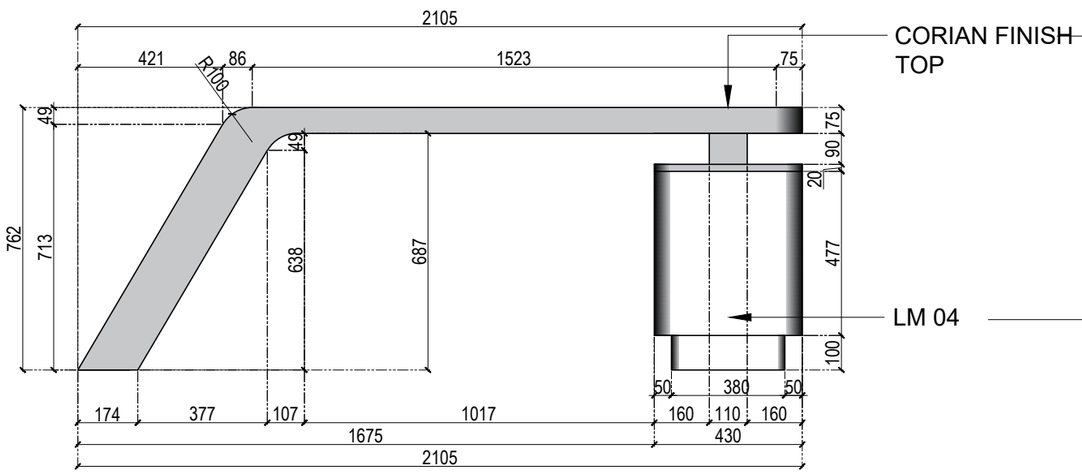

2 ELEVATION AT A
DIRECTOR ROOM

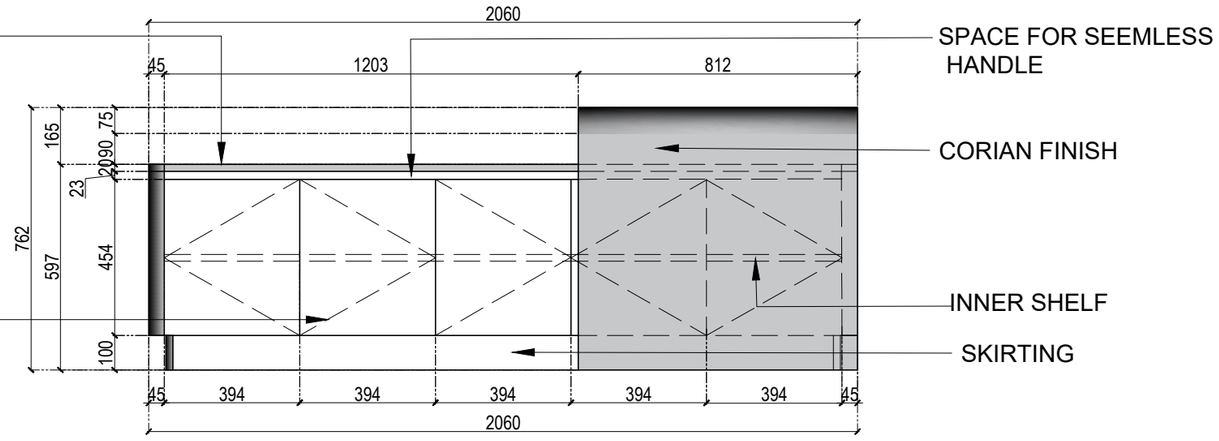

3 ELEVATION AT B
DIRECTOR ROOM

DIRECTOR WORKING TABLE

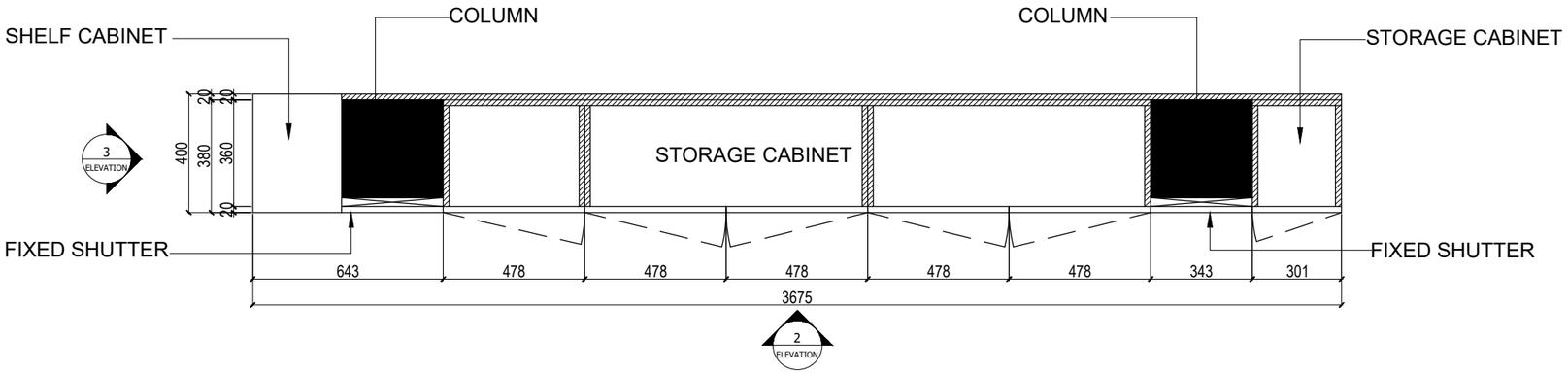

1 PLAN
DIRECTOR STORAGE CABINET

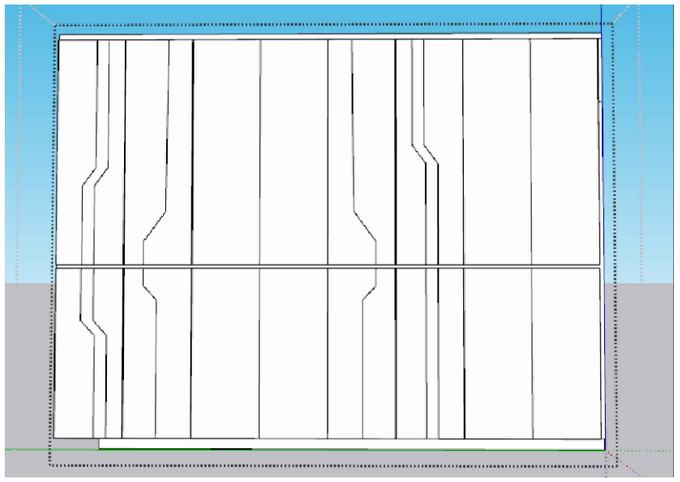

4 REFERENCE IMAGE
DIRECTOR STORAGE CABINET

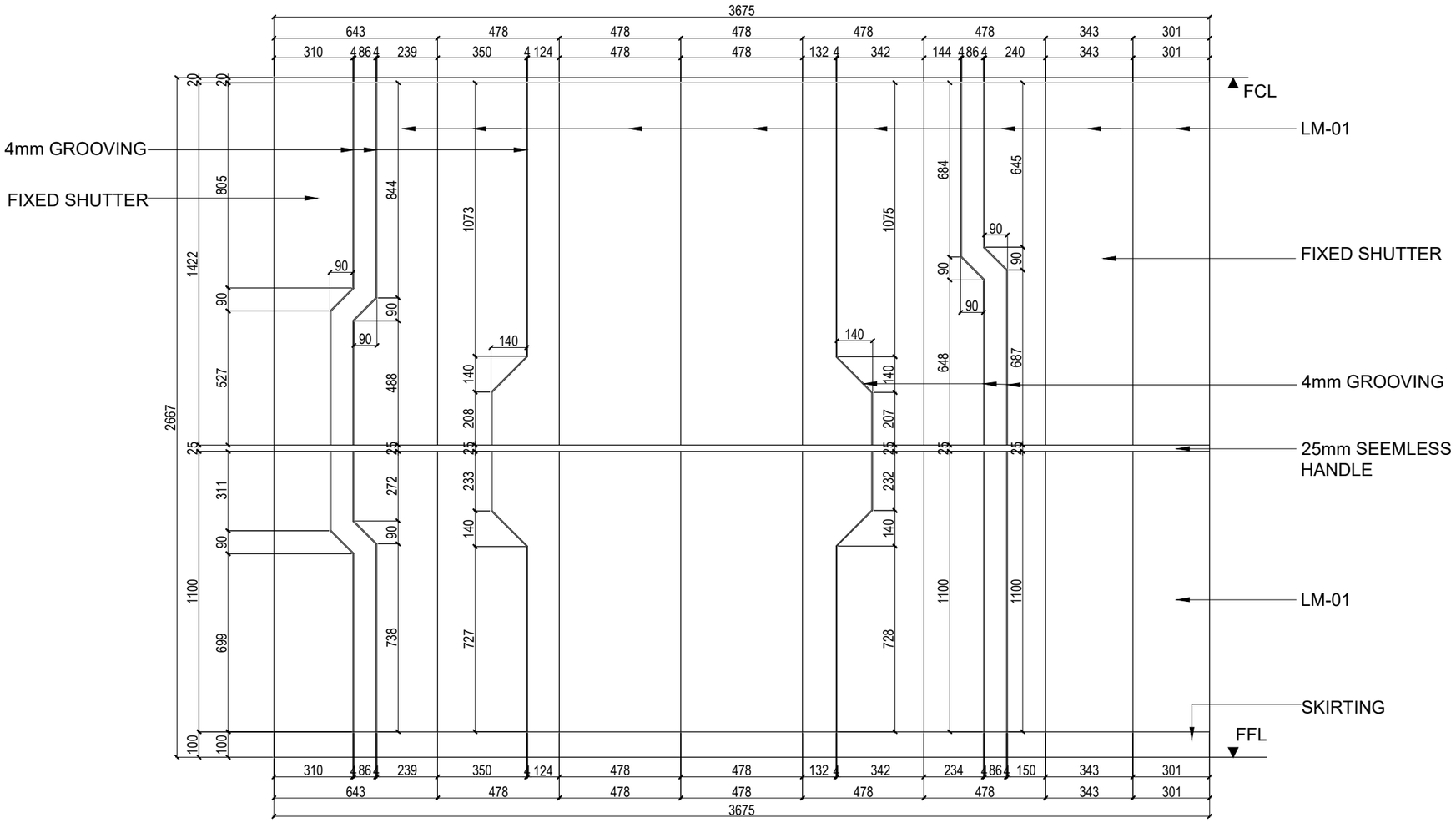

2.1 ELEVATION (I)
DIRECTOR STORAGE CABINET

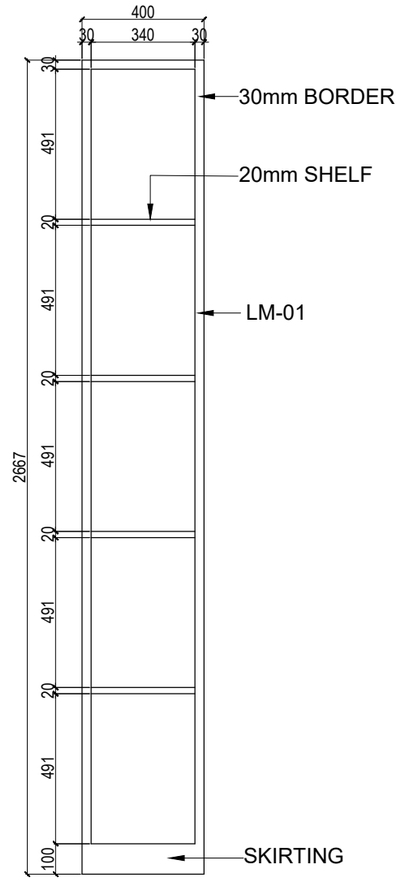

3 ELEVATION
DIRECTOR STORAGE CABINET

DIRECTOR ROOM STORAGE CABINET-(PAGE 1)

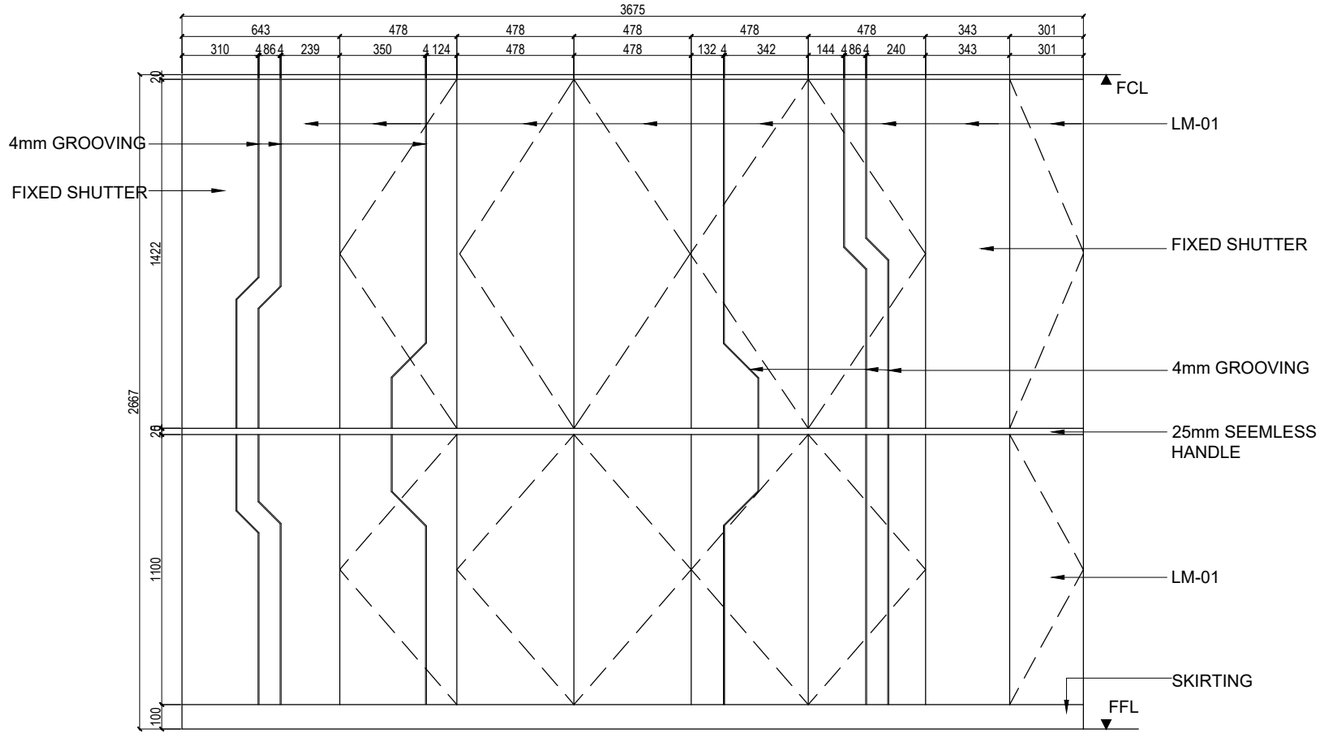

2.2 ELEVATION (II)
DIRECTOR STORAGE CABINET

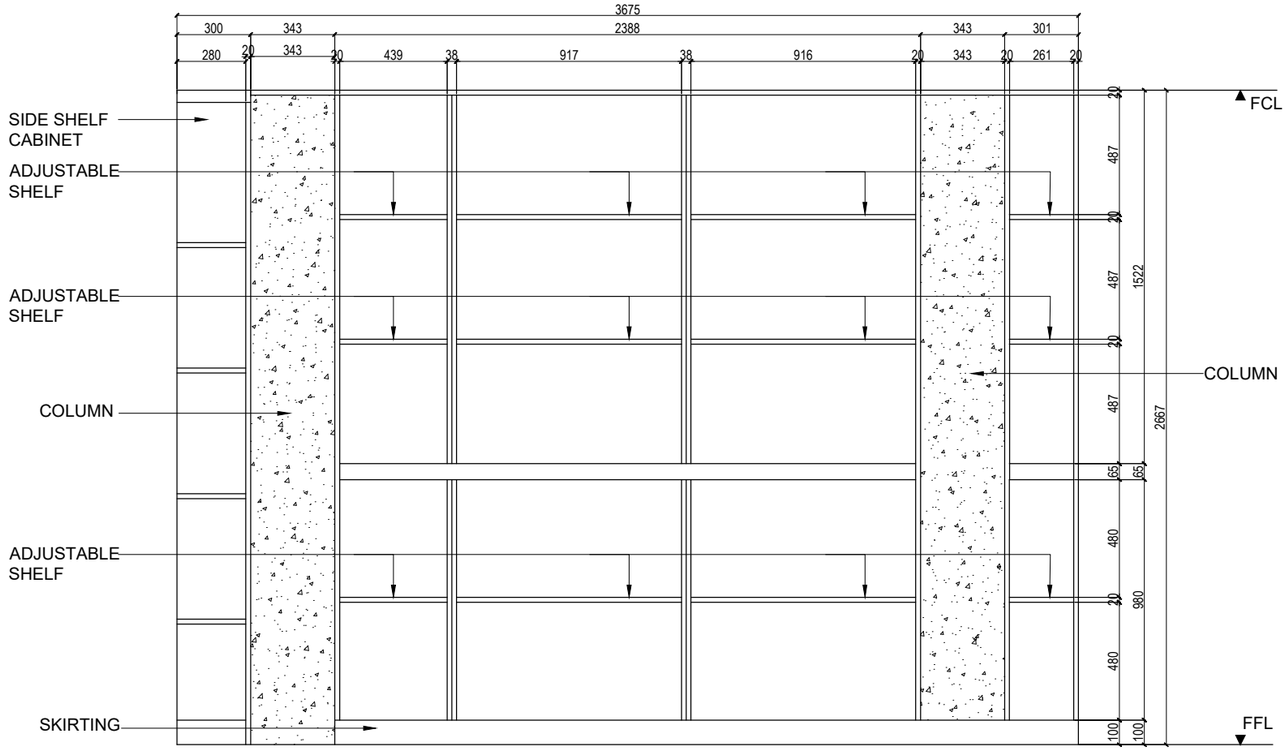

5 INNER ELEVATION
DIRECTOR STORAGE CABINET

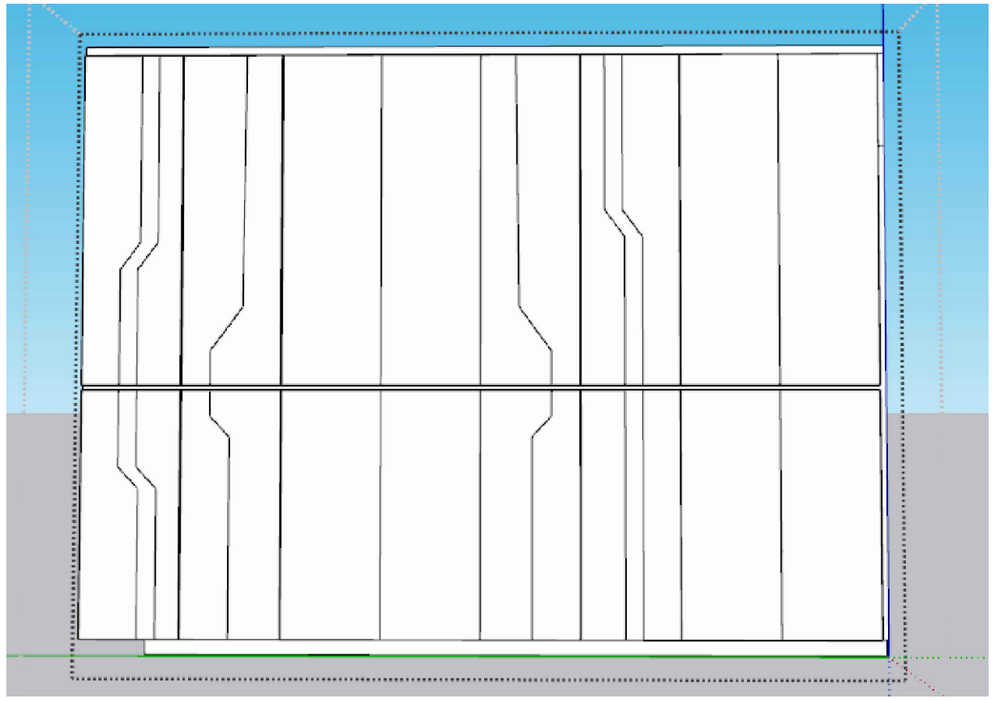

4 REFERENCE IMAGE
DIRECTOR STORAGE CABINET

DIRECTOR ROOM STORAGE CABINET-(PAGE 2)

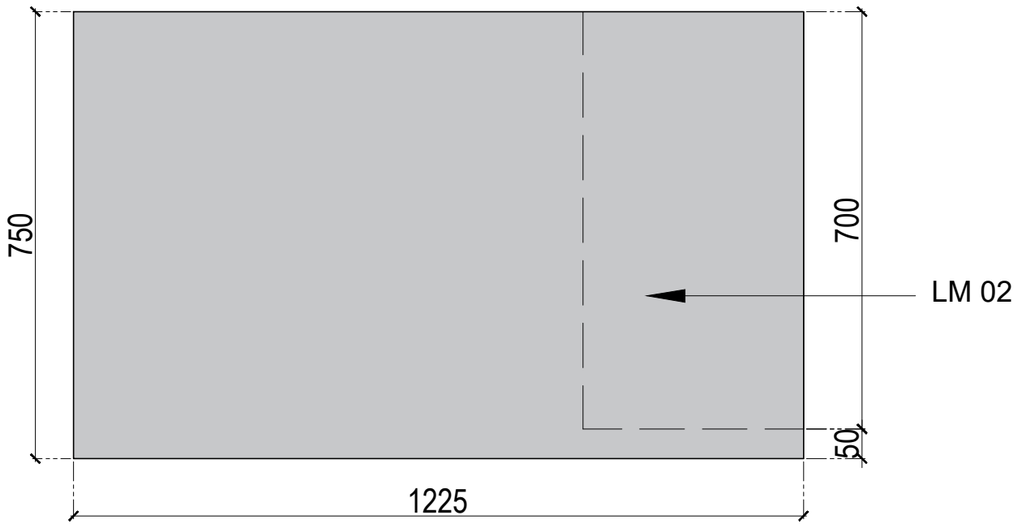

1 PLAN
WORK STATION

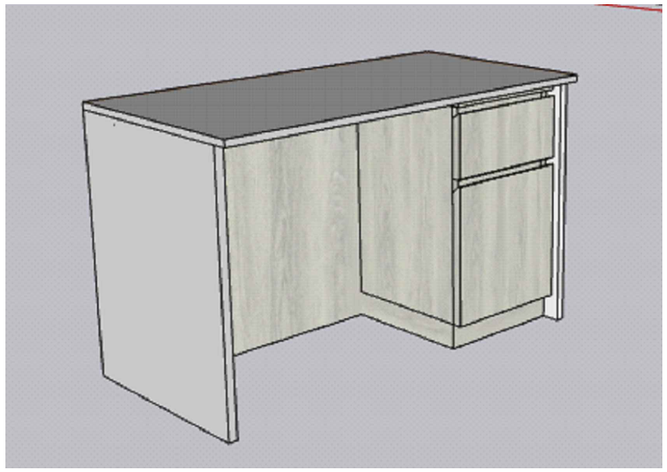

4 REFERENCE IMAGE
WORK STATION

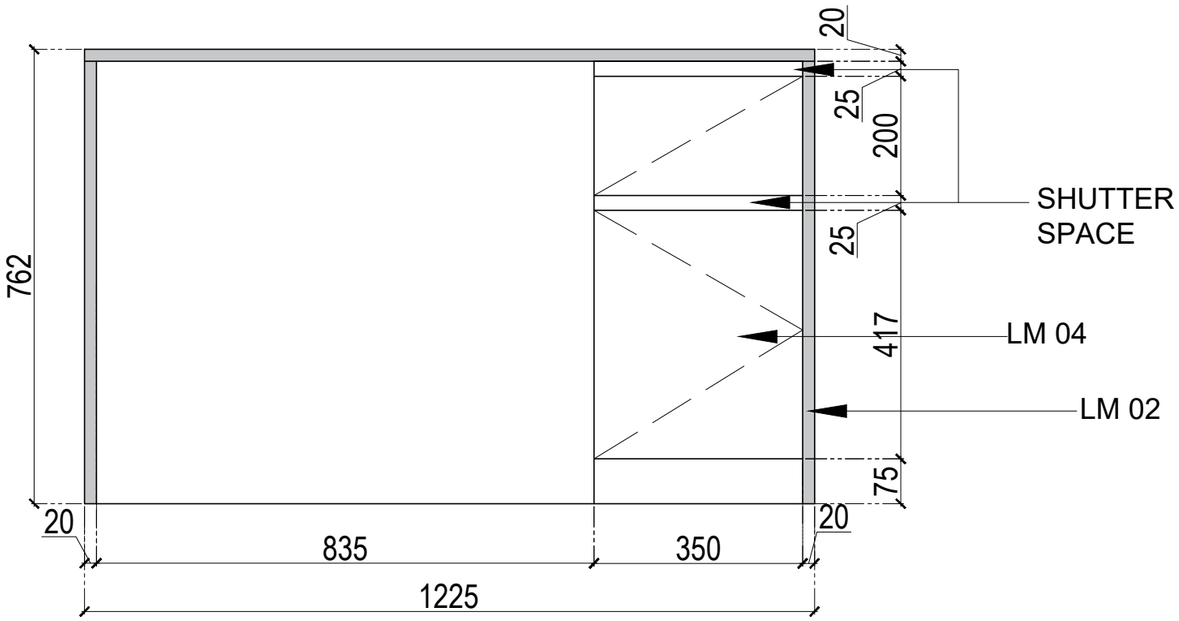

2 FRONT ELEVATION
WORK STATION

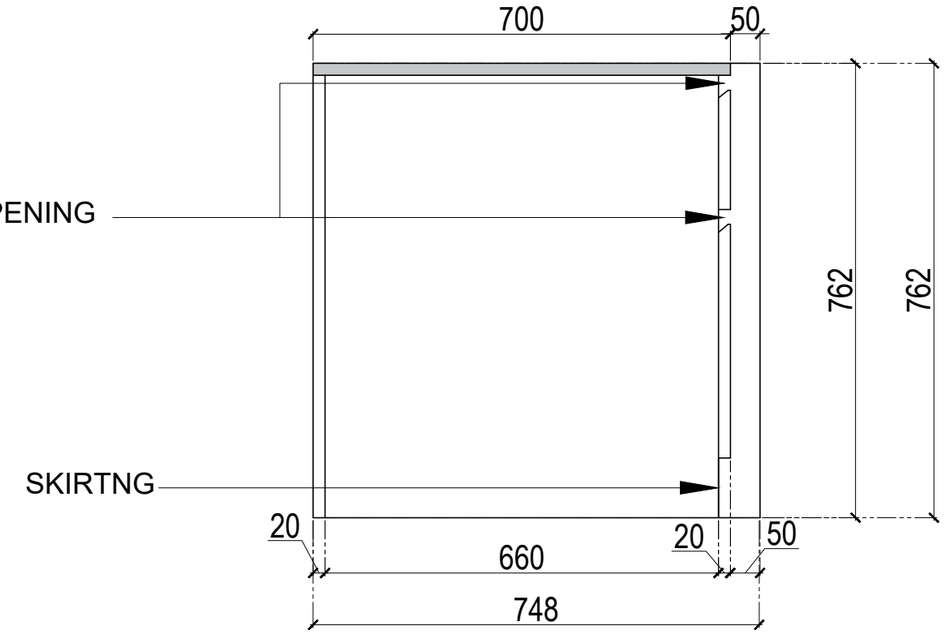

3 SIDE ELEVATION
WORK STATION

WORK STATION AREA WORK STATION

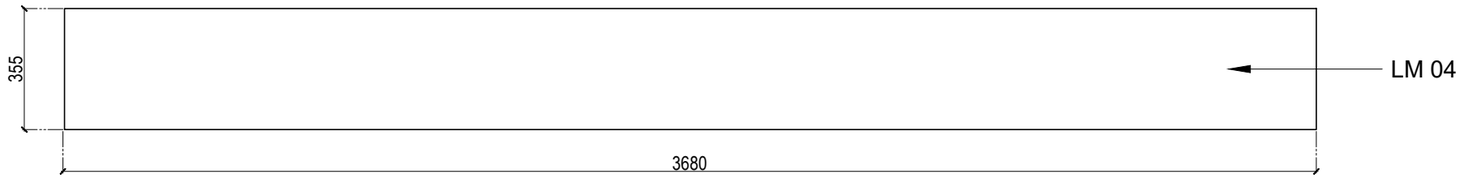

1 PLAN
UPPERHEAD CABINATE

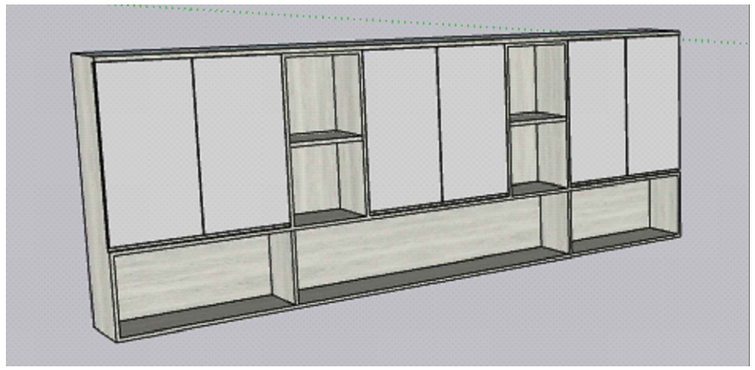

4 REFERENCE IMAGE
UPPERHEAD CABINATE

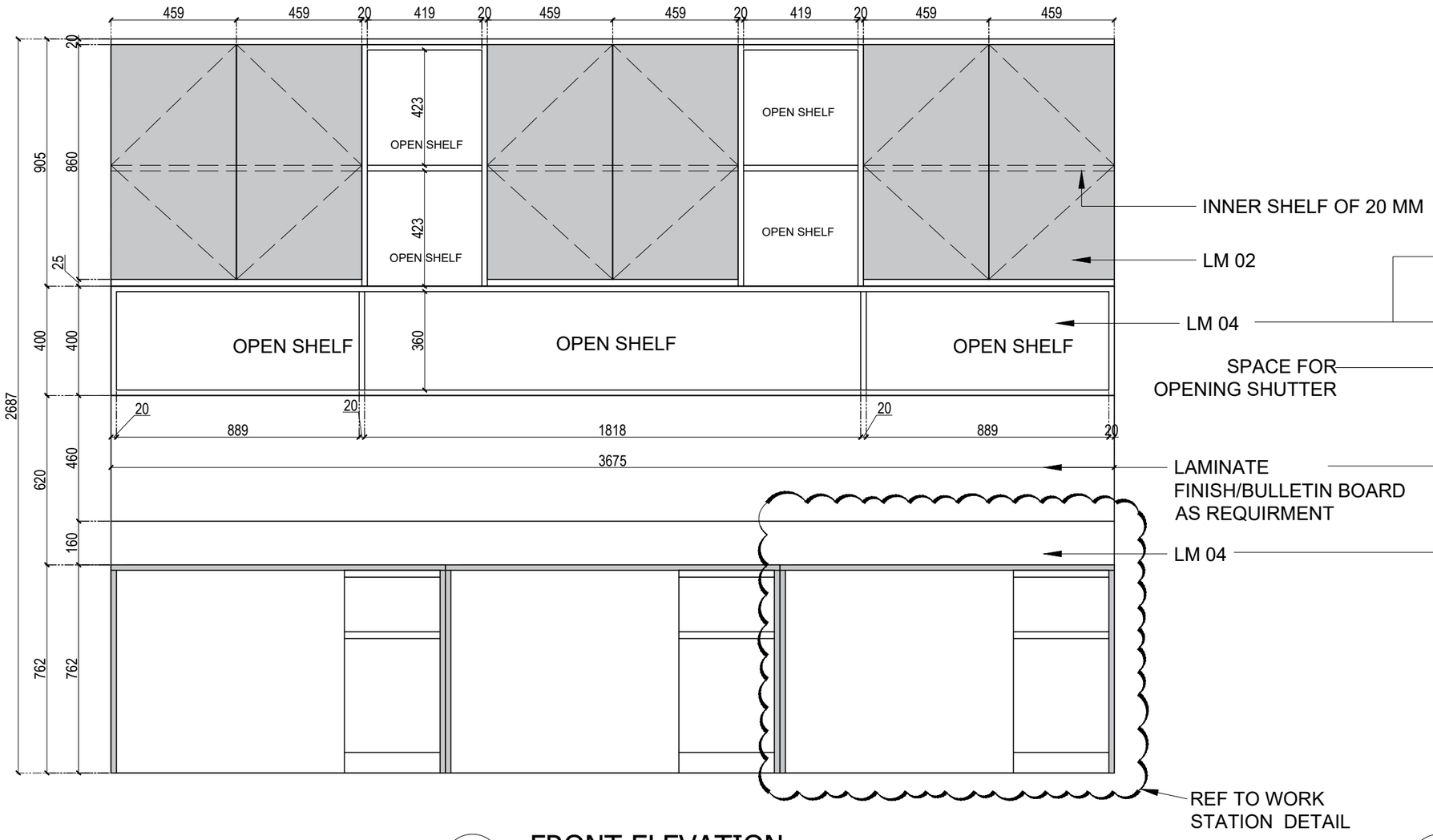

2 FRONT ELEVATION
UPPERHEAD CABINATE

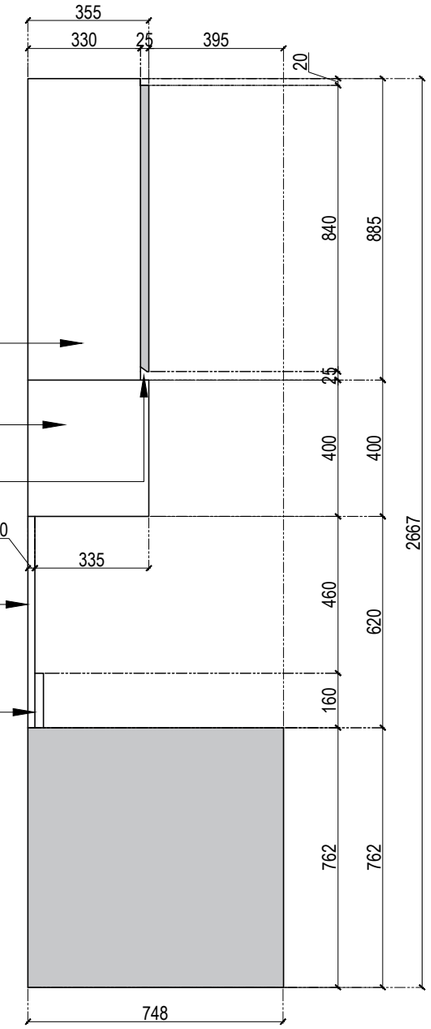

3 SIDE ELEVATION
UPPERHEAD CABINATE

WORK STATION AREA UPPER CABINATE

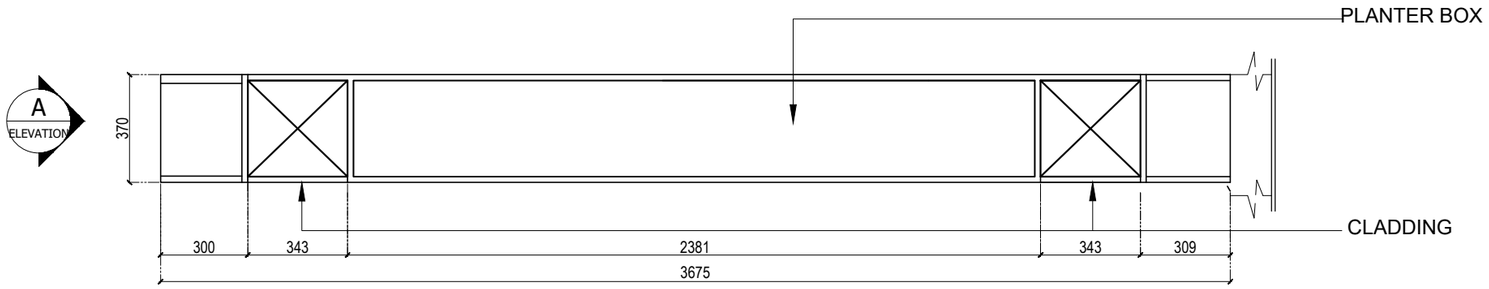

1 PLAN
WORKSTATION AREA PLANTER BOX

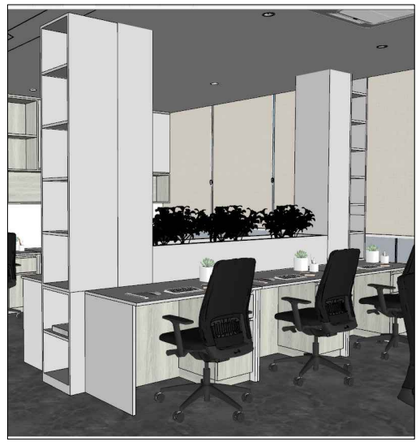

1 REFERENCE IMAGE
WORKSTATION AREA PLANTER BOX

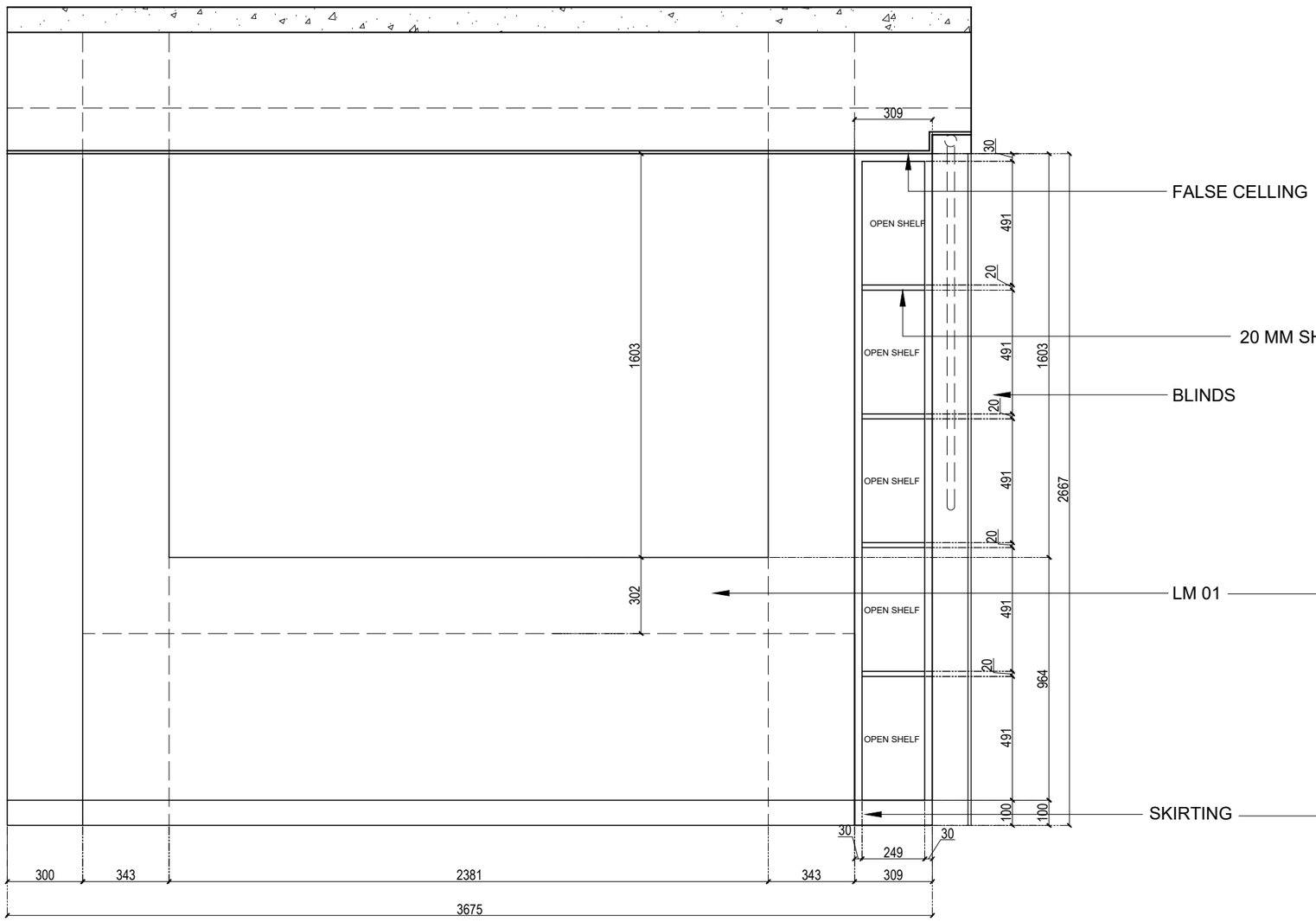

2.1 FRONT ELEVATION
WORKSTATION AREA PLANTER BOX

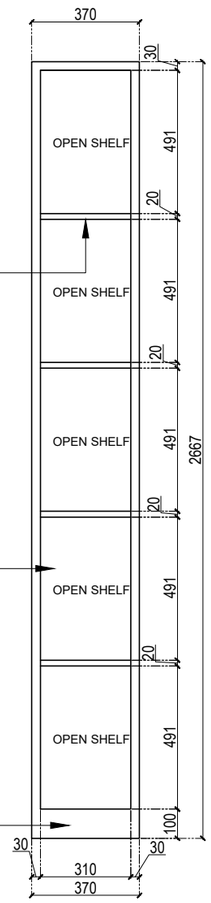

3 ELEVATION AT A
WORKSTATION AREA PLANTER BOX

WORKSTATION AREA PLANTER BOX